Oslo

Study Chair

奥斯陆学习椅

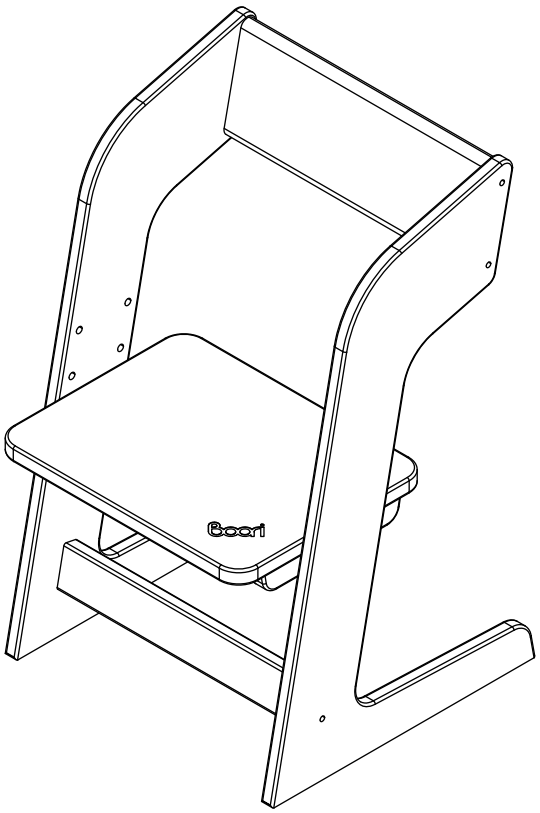

IMPORTANT:
PLEASE READ THE INSTRUCTIONS CAREFULLY AND KEEP FOR FUTURE REFERENCE

重要：请仔细阅读此说明书，并妥善保管以便日后参考。

BK-OSSCv20-BAAD

Boori Australia Pty Ltd
26 Peter Brock Drive
Eastern Creek Sydney
NSW 2766 Australia
Tel: +61 2 9833 3769
Fax: +61 2 9673 4240
www.boori.com.au

Boori (Europe) Ltd
Unit 1 Riverside House,
Mill Lane, Newbury,
Berkshire, RG 14 5QS UK
Tel: +44 016 3529 5670
Fax: +44 016 3587 7552
www.boori.co.uk

Halim & Boori Company
10F. Halim INT'L B/D, #1674-4,
Seocho-Dong, Seocho-Gu,
Seoul, Korea
Tel: +82 2598 1470
Fax: +82 2583 8885
E-mail : ted@boori.co.kr
Postal code: 137-725.

ブーリジャパン株式会社
〒141-0031
東京都品川区西五反田
7-22-17 TOCビル5F
TEL：03-6420-0024
EMAIL：info@boori.co.jp
HP：www.boori.jp

上海薇奈莎商贸有限公司
博瑞儿童用品（上海）有限公司
上海市盈港东路6433号1幢B区101室
邮编：201703
电话：+86 21 5296 6600
传真：+86 21 5296 6636
网址：www.boori.com.cn

Oslo Study Chair (BK-OSSCv20/BAAD)

Dimensions/产品规格: 443*416*690mm

Main Materials/主要材质：Australia Araucaria/Plywood/European Beech/澳洲南洋杉/实木多层板/欧洲山毛榉

Hardware / 五金单

A x 1	B x 6	C x 4	D x 6
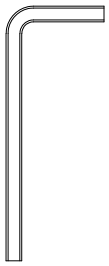	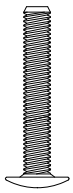	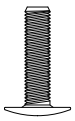	
	M6 x 47	M6 x 35	M6 x 14

Parts List / 部件清单

NOTE: Use only spare parts approved by the manufacturer.
注意：仅限使用制造商提供的产品零配件及五金。

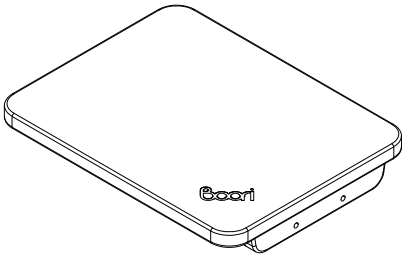

① x 1

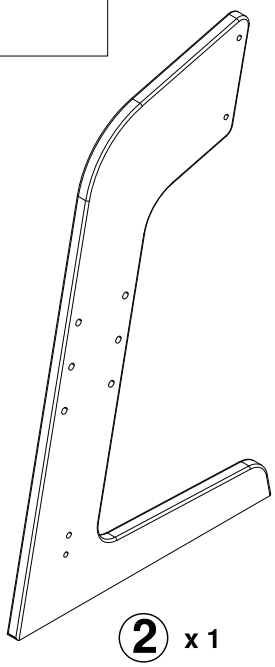

② x 1

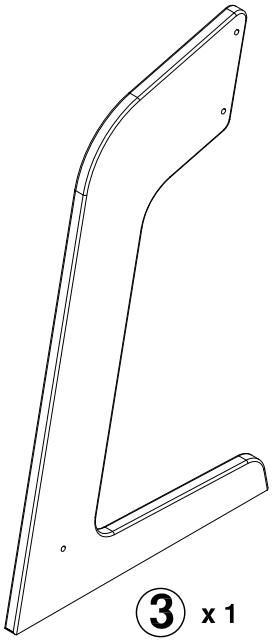

③ x 1

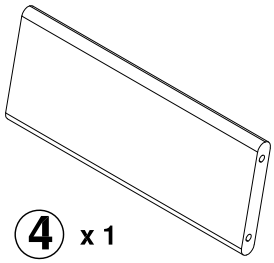

④ x 1

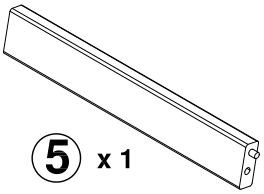

⑤ x 1

Assembly / 安装说明

1

Do not tighten the bolts for now.
螺丝暂时不要完全锁紧。

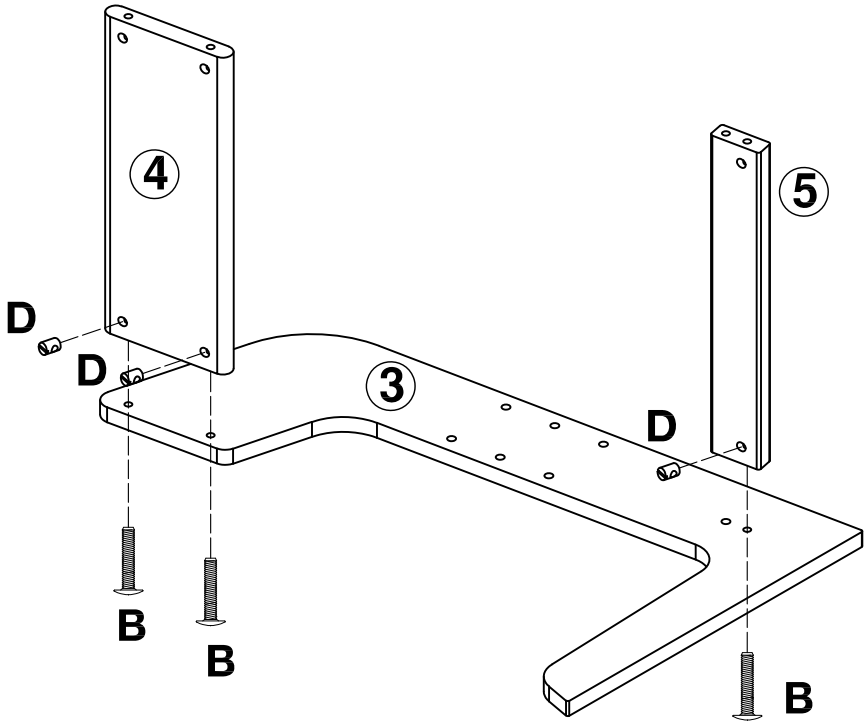

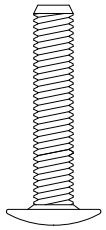

B x 3

D x 3

2

Do not tighten the bolts for now.
螺丝暂时不要完全锁紧。

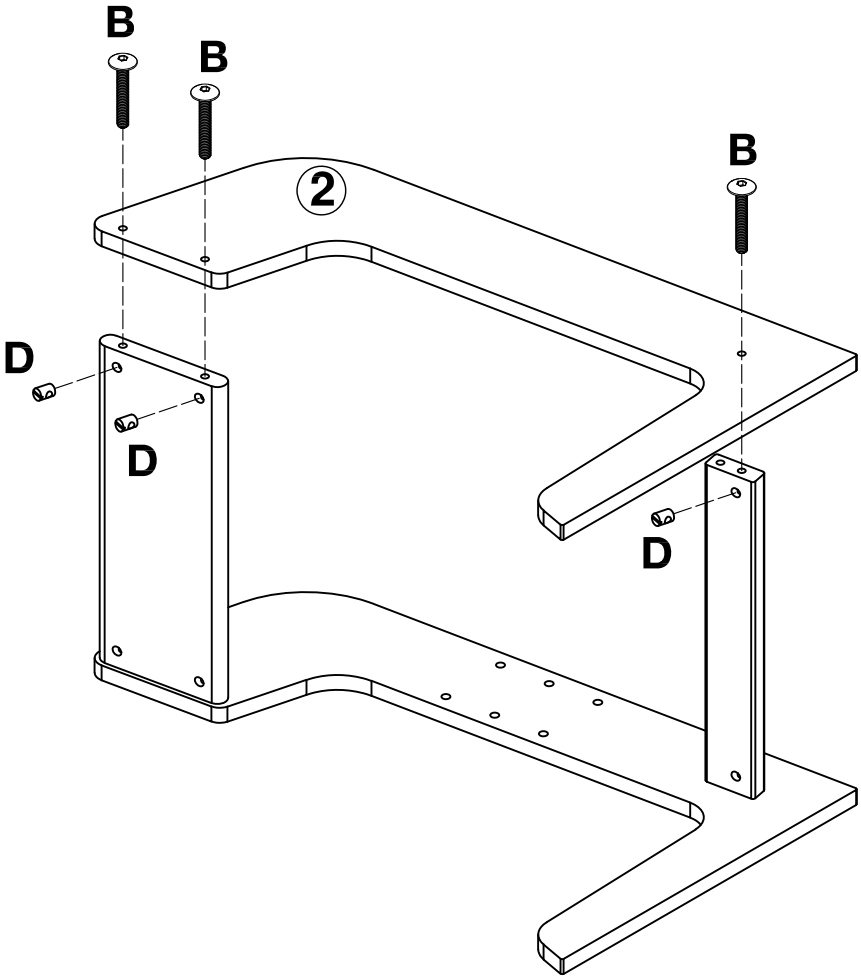

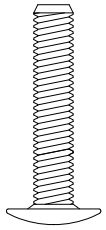

B x 3

D x 3

Assembly / 安装说明

3

Please note:

1. Assemble according to the assembly instructions and ensure all screws are tightened.

2. Please check regularly to ensure no screws have come loose.
Make sure all screws are still tightened.

注意：

1、请按照安装说明，锁好所有螺丝，并确保锁紧；

2、请定期检查螺丝是否松动，确保螺丝锁紧。

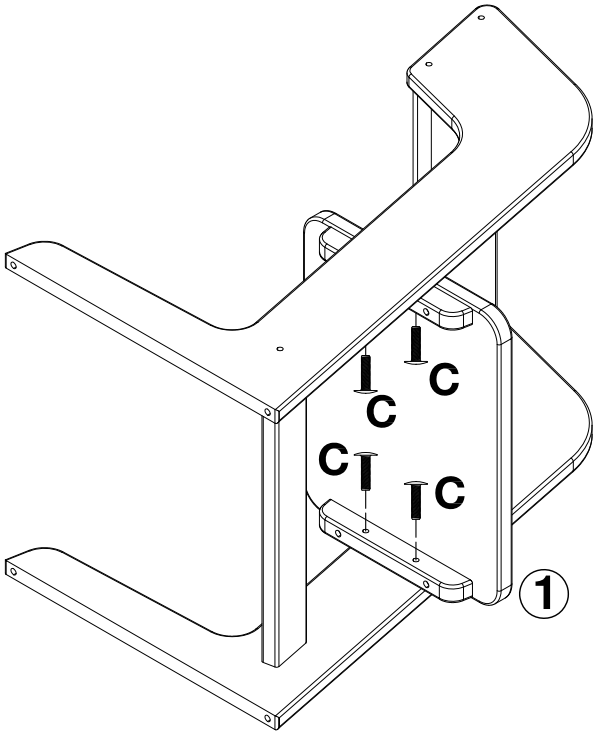

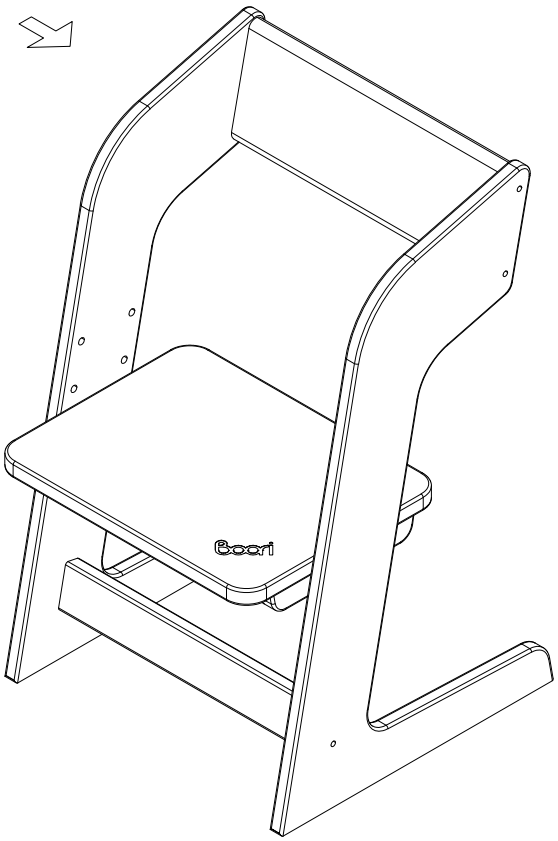

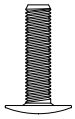

C x 4

Height Adjustment / 调节座板面高度

1

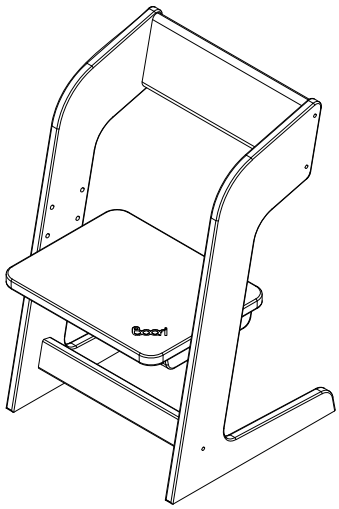

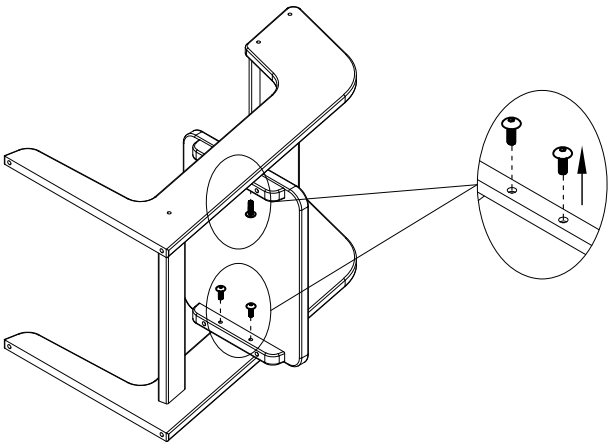

2

First Height Level
第一档

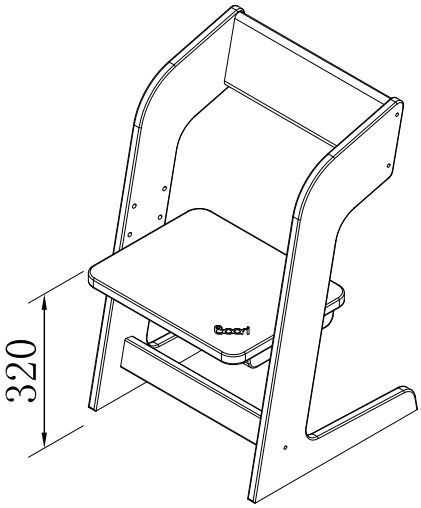

Second Height Level
第二档

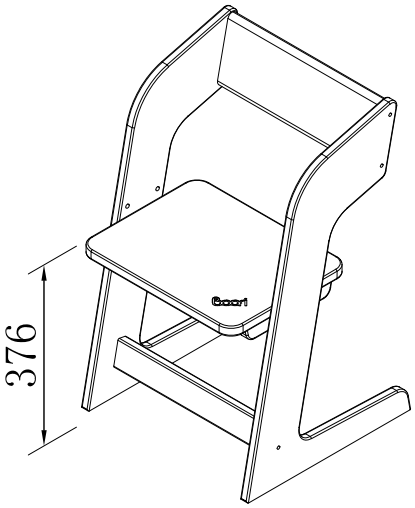

Third Height Level
第三档

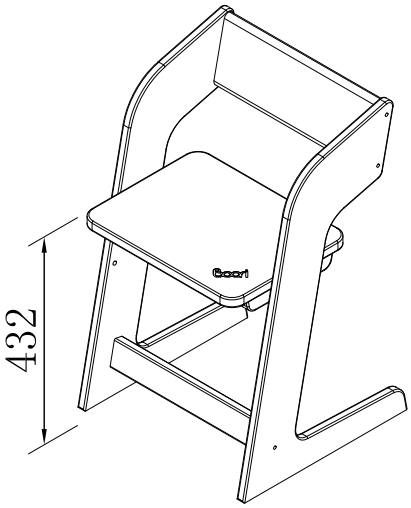

3

Please note:

1. Assemble according to the assembly instructions and ensure all screws are tightened.

2. Please check regularly to ensure no screws have come loose. Make sure all screws are still tightened.

注意：

1、请按照安装说明，锁好所有螺丝，并确保锁紧；

2、请定期检查螺丝是否松动，确保螺丝锁紧。

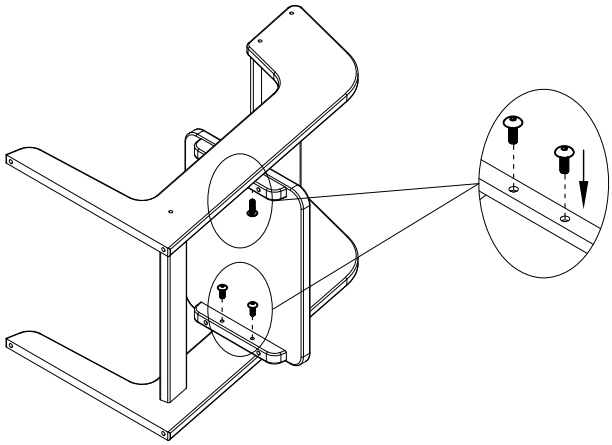

Kids Furniture Care Instructions

We hope you love your new Boori Kids furniture and it becomes an important part of your family home. In order to keep your furniture looking its best, please follow these care instructions.

Assembly

- When assembling your furniture, please follow the assembly instructions and use the tools supplied
- Boori products should only be assembled by an adult away from children
- Heavy components should be lifted by two people to prevent injury
- Every section that is assembled should be checked after assembly before moving onto the next stage

Product Positioning

- This product is made of timber and is therefore flammable
- Do not place your Boori furniture near open flames, fire places or extreme heat sources such as electric or gas heaters
- Do not direct sprayers or humidifiers at the furniture as they can cause damage
- Where possible avoid exposing furniture to extreme changes in temperature. Timber is a natural product and will want to expand and contract as the temperature varies. Extreme temperature variations can damage timber products.
- Avoid direct exposure to sunlight as this can cause our natural timber and plant oil colours to fade.
- Black rubber feet on items such as radios, computers and picture frames can cause marks. Always use a felt mat (not plastic) to protect your Boori furniture
- Do not place in damp environments or areas with high levels of moisture as this encourages mould growth.

Cleaning

- Clean your furniture by wiping with a soft, damp cloth
- If necessary, use a mild soapy solution and wipe clean with a soft cloth
- Do not use strong household cleaners
- Always wipe in the direction of the wood grain, not in circles.
- Wipe up spills immediately with a soft cloth
- Protect the furniture against bedwetting as this can lead to discolouration

Maintenance

- We advise that you regularly check the safety of your furniture
- Ensure all bolts and screws are tightened and check for loose connections, missing parts or sharp or pointed edges
- Avoid contact with sharp objects and hot liquids
- When moving furniture always lift and place it into position; do not drag. We recommend that two people lift or alter the positioning of the furniture

Product testing Standards

- Standard: GB 28007-2011

Warranty Against Defects - Australia

This Boori Kids product ("Product") (including mattress) carry a full one (1) year manufacturer's warranty ("Warranty Period") to the end-purchaser ("the Customer") as testimony to the quality and longevity of the product.

This warranty excludes general wear & tear and damage caused, by the Product not being used in accordance with its instructions or the care instructions. During this Warranty Period Boori Australia Pty Ltd (ABN 43 160 962 354) ("Boori") will replace or repair any defective part. In the event of a Product being replaced, as a whole unit or part thereof during the Warranty Period, the warranty on the replacement will expire one (1) year from the original purchase date.

This guarantee excludes accidental damage, misuse and or improper transporting and handling.

The warranty is void if the original Product has been altered in design or colour in anyway.

Subject to the Australian Consumer Law, this Warranty does not apply to any products sold as seconds, floor stock, repaired products, or products that have a defect where this has been drawn to the customer's attention before the purchase of the product. In addition, this Warranty will not apply if:

(a) Repairs to a product are made or attempted by a service provider other than one approved by Boori.
(b) The product has not been used or maintained in accordance with the manufacturer's instructions as provided with the product.
(c) The customer uses the product in an abnormal manner for example if the product is abused, misused, dropped, crushed, impacted with any hard surface, exposed to extreme heat (including fire) or cold, not maintained properly or used after partial failure.
(d) The product has been modified, incorrectly adjusted or operated, subjected to incorrect electrical supply or inconsistent electrical supply or used with inappropriate accessories.
(e) The product is tampered with in any way

All warranty claims must be lodged:

1. at the place of original purchase as set out on your receipt for purchase of the Products or you may contact Boori on 02 9833 3769 to obtain further details; and
2. together with a proof of purchase.

Where the Customer makes a claim pursuant to this Warranty, all expenses incurred in sending the Products to Boori are the Customer's responsibility.

Boori's liability in respect of a breach of a consumer guarantee or any warranty made under this Warranty for any Products not of a kind ordinarily acquired for personal, domestic or household use is limited, in relation to the Products to the extent permissible by law and at it's option to:

1. replacing the Products or the supply of equivalent Products;
2. the repair of the Products;
3. the payment of the cost of replacing the Products or of acquiring equivalent goods; or
4. the payment of the cost of having the Products repaired.

To the extent permitted by law, all other warranties whether implied or otherwise, not set out in this Warranty are excluded and Boori is not liable in contract, tort (including, without limitation, negligence or breach of statutory duty) or otherwise to compensate the Customer for:

1. any increased costs or expenses;
2. any loss of profit, revenue, business, contracts or anticipated savings;
3. any loss or expense resulting from a claim by a third party; or
4. any special, indirect or consequential loss or damage of any nature whatsoever caused by the Customer's failure in complying with its obligations.

Limitations on Warranty Disclaimers

In the following paragraph, 'Our' means 'Boori', 'You' means 'the Customer' and 'goods' means 'Products':
Our goods come with guarantees that cannot be excluded under the Australian Consumer Law. You are entitled to a replacement or refund for a major failure and for compensation for any other reasonably foreseeable loss or damage. You are also entitled to have the goods repaired or replaced if the goods fail to be of acceptable quality and the failure does not amount to a major failure.
The benefits given to the Customer in this Warranty are in addition to other rights and remedies under a law in relation to the Products to which this warranty applies.

Warranty Against Defects - UK

All Boori products (including mattresses) carry a full one (1) year manufacturer's warranty as testimony to the quality and longevity of the range. This warranty excludes general wear & tear and damage caused, by the product not being used in accordance with its instructions or the care instructions.

During this guarantee period Boori will replace or repair any defective part. In the event of a product being replaced, as a whole unit or part thereof during the guarantee period, the guarantee on the replacement will expire one (1) year from the original purchase date.

This guarantee excludes accidental damage, misuse and or improper transporting and handling.

The warranty is void if the original product has been altered in design or colour in anyway.

All warranty claims must be lodged at the place of original purchase and proof of purchase must be provided in order to lodge a warranty claim.

售后服务及产品使用保养手册

一、产品检验标准

产品甲醛释放量：合格

执行标准：GB 28007-2011（家具）

二、信心质保

(一) 我们对所有Boori产品提供长达一年质保。

(二) 三包服务范围：

1. 包修: 凡属产品本身质量问题的一律免费维修或者提供补件。因顾客自行运输、安装及使用维护不当造成的问题，本公司负责收费维修或补件。
2. 包换: 一年内，同一缺陷经两次修理未能达到质量标准的包换，更换后的产品保修期从更换之日起重新计算。
3. 包退: 在包修期限内，同一缺陷经两次修理、调换后仍无法达到质量标准的，在约定期限内不能调换的，经检验为不合格的。

(三) 本质保不包括产品正常使用损耗、不按照使用说明书使用而造成的产品损伤破坏，不包括由于运输、安装、使用过程不当造成的意外损坏。如果产品被顾客改装或是故意损坏，也不在保修范围之列。三包”范围属下列情况之一者，不实行“三包”服务，可酌情收费修理。

1. 消费者因使用、维护、保管不当造成损坏的；
2. 自行拆动造成损坏的；
3. 无 “三包”凭证及有效发票的，又不能证明其所购产品在“三包”有效期内；
4. “三包”凭证号与修理产品型号不符合或者涂改的；
5. 超过“三包”期限的。

(四) 运费说明：

1. 因产品质量问题产生的来回运费由我公司承担。
2. 因顾客因素造成的补件和返厂维修及退货等，来回运费由顾客承担。
3. 由于顾客自己找物流公司，很容易碰到乱要价，价格虚高的问题，我公司已与合作物流达成战略合作。如需寄回，请联系客服。

三、常见问题FAQ

(一) 关于澳大利亚Boori

Boori源自澳大利亚，始于1993，国际专业婴童房家具品牌，二十五年专注婴童家具设计与制造，产品受到全球超过800家高端商厦信赖，如欧洲Harrods商厦、澳洲David Jones百货、英国John Lewis连锁百货等，畅销澳洲、欧洲、美国、日本、韩国、中国等国家及地区，品质享誉全球，现已成功打造出两个品牌“Boori”和“BooriKIDS”，主要产品涵盖婴儿床、儿童床、早教、学习桌椅、衣柜等儿童与青少年家具，全面考虑儿童房睡眠、储物、学习、 娱乐、教育等生活要素，真正打造0-18岁概念的婴童房。

(二) Boori家具的用材是什么

Boori家具甄选50年以上树龄进口实木，木材通过FSC安全认证，生长过程中不使用任何化学杀虫剂，砍一种一，绿色环保可持续；Boori更是通过美国权威UL绿色环保金奖认证的婴童家具企业，可安心让孩子们使用，收到产品后，可先将产品放到阴凉通风处静置几日即可放心使用，可消除因严密包装产生的味道。

(三) Boori家具用的是什么涂层?

我们使用的是水性生物基涂料，简称生物基，是指利用可再生物质为原料，包括农作物、树木、其它植物等通过可再生技术制作而成的一种新型植本涂料，有机挥发物极低，进一步降低对家人和孩子的伤害，做到更安全、环保，对于喜欢啃食的宝宝，为宝宝设置一道天然保护层；涂层表面晶莹透亮、温润触感，并且具有耐水、耐磨、耐老化、干燥快、使用方便等特点，为孩子创造更舒适放心的居住环境。

(四) 为什么要选用Boori配套的床垫

床垫的材质和尺寸对孩子睡眠来讲非常重要，Boori床垫专为Boori婴童床设计，运用天然及高科技材料，科学搭配，健康护脊，尺寸专为Boori婴童床研制，为宝宝的成长提供最安全舒适的睡眠环境。

(五) 如何购买单独配件

如果您需要购买单独配件，请联系客服400-865-1128

(六) 如何了解Boori更多信息

官网：www.boori.com　　官微：搜索公众号“Boori”并关注

四、安装指导

(一) 请按我公司提供的产品组装说明书组装本产品。

(二) 请定期检查床体的安全性，确保所有的螺杆、螺丝紧固，并检查五金件是否有损坏，接头是否有松动，零件是否有遗失，边缘是否有毛刺等。

(三) 您也可以联系客服获取安装视频指导。

五、家具保养

为了使您的Boori婴童房保持最佳状态，我们对Boori家具的日常保养提供如下建议：

1. 避免强光直射，远离热源。
2. 用柔软洁净布料直接擦拭灰尘。
3. 如有需要，请用柔软洁净的湿布蘸取中性清洁剂擦拭油污，并立马擦干。
4. 请顺纹理擦拭，避免打圈移动。
5. 避免使用家庭强力去污剂。
6. 避免接触尖锐物体、热液体。
7. 避免将橡胶底座的物品放置到家具上，比如收音机、电脑或是电话。
8. 表面使用毡布覆盖保护(勿用塑料材质)。
9. 避免同时抽出两个及以上抽屉。
10. 移动家具时一定要抬离地面并平放至水平位置，避免拖拽。
11. 避免暴露在极端变化的温度与湿度下，这会损坏木制品，不要将家具放在空调出风口、壁炉、散热器、空间加热器或除湿器附近，避免近火或强热源。
12. 避免家具受到阳光直射，紫外线会使产品褪色，在一些情况下还会使颜色变暗，会使表面植物油产生龟裂或毛细裂纹。白色会慢慢自然变暗，是由于木材会因外界环境变化而产生一些颜色改变，从而导致家具表面植物油颜色随之改变，但这不属于质量缺陷，是实木家具所具有的一种特性。

我们对Boori床垫的日常保养提供如下建议：

1. 定期改变受力点。床垫建议在前三个月内每个星期，左右反转一次，之后每2-3个月左右反转一次，这样可以确保床垫更加耐用。
2. 保持清洁。可使用吸尘机除去灰尘及尘螨，如果床垫上任何污迹或液体，可用少量冷水混入温和去污剂清理并迅速用吸水纸吸干，切勿把床垫浸在水中或其他液体里，特别是有椰棕填充的床垫。
3. 请避免使用酸碱性化学物品清洁床垫，酸碱性化学物品不仅会损坏床垫，更会影响婴童身体健康。

4. 保护好床垫，最佳方法是加一张保洁垫，因保洁垫比较容易取下，能通风透气去除异味，使床垫更卫生、更加耐用。
5. 使用棕垫时定期2-3个月将棕垫晾晒，保持干爽，延长使用年限。
6. 使用时去掉塑料包装袋，以保持环境通风干爽，避免床垫受潮。

六、退换货流程

如需退换货，请您按照以下流程操作。工作日客服会在12小时内进行处理，非工作日客服会在恢复工作日后12小时内处理。

1. 请保证货品及包装完好，不影响二次销售。
2. 请第一时间联系客服，如有质量问题，请及时拍照传给客服。
3. 与客服联系并协商一致后，请用一张小纸条写上您的退换货原因、退货商品型号、退货商品有无存在质量问题、您的收货地址和联系方式，将纸条放在包装内，将货物寄回。

七、联系方式

售后服务联系电话：400 865 1128。

退换货地址: 浙江省嘉兴市南湖区七星街道都市经济产业园(东大路西)浙江瀚豪实业有限公司，Boori仓库收，0573-8388 5718。

警告

适用年龄段：3岁及以上。

注意！只允许成人安装，儿童勿近。

警告！小心夹伤。

该手册适用于中国市场