S.Essentials Console 2 Drawer
23701861 / 23701885

Thank you for purchasing the S.Essentials Console 2 Drawer. Before you begin to assemble your new piece of furniture, please check to ensure that all hardware and parts have been supplied. This page lists all contents included in the carton(s).

Follow instructions closely as deviation from them may present a possible safety risk and may void your warranty.

It is recommended that assembly is done on a soft surface such as carpet to avoid any damage.

If you experience any problems with your new purchase, please phone Freedom Customer Service (FCS) on 1300 135 588 (Australia) or 0800 469 327 (New Zealand).

Care Information

Periodically check and re-tighten any fasteners. Avoid direct sunlight as it may cause the product to change colour.
Dust the surfaces by using soft and clean cloth. Avoid using harsh abrasives, chemicals or polishes. It is important to remove moist substances immediately.
Take care when moving the furniture, do not drag it on the floor to avoid damages.

Hardware (Supplied)

Bag A in Carton 1	(A) x2 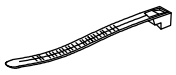	(B) M3.5*16 x4	(C) x4	(D) M6*30 x8
Bag B in Carton 2	(E) M6*12 x8	(F) M6*12 x8	(G) M4 x1	

Tools Required (Not Supplied)

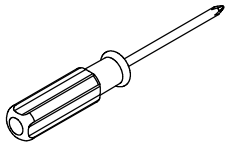

Parts

Carton 1 23701861

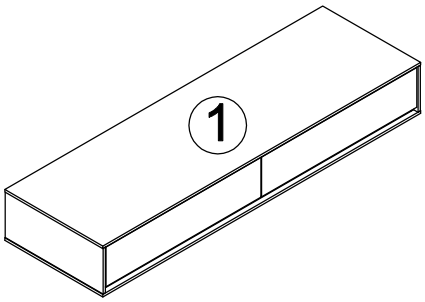

Carton 2 23701885

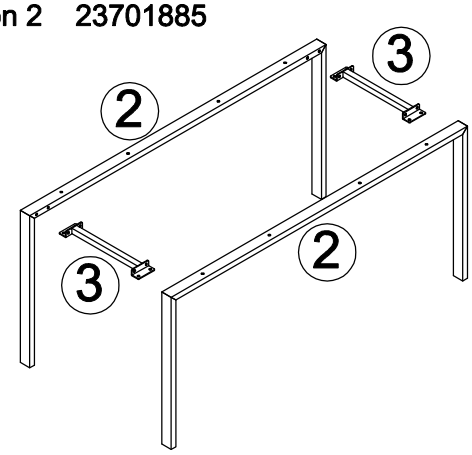

S.Essentials Console 2 Drawer
23701861 / 23701885

Step 1

Note: Do not fully tighten the screws until the complete assembly.

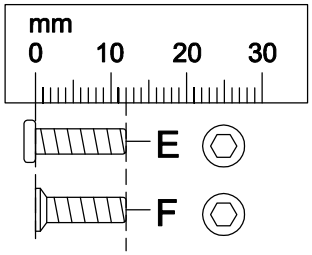

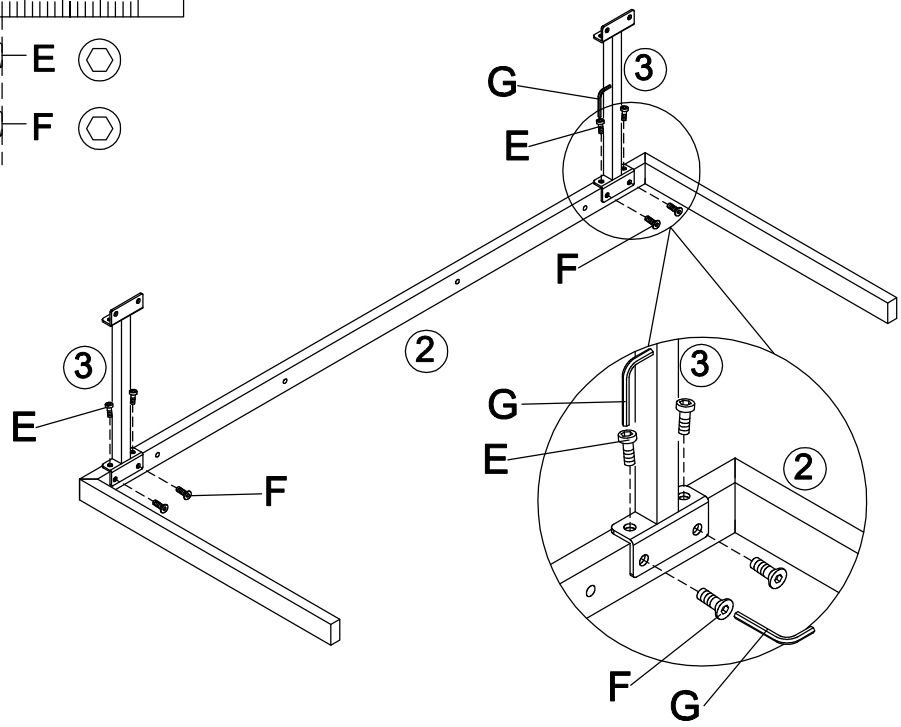

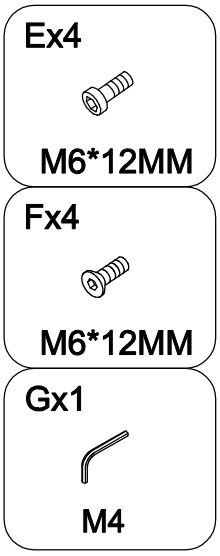

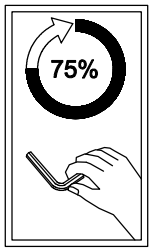

Step 2

Note: Do not fully tighten the screws until the complete assembly.

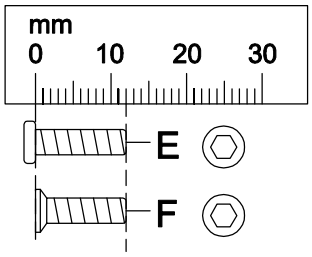

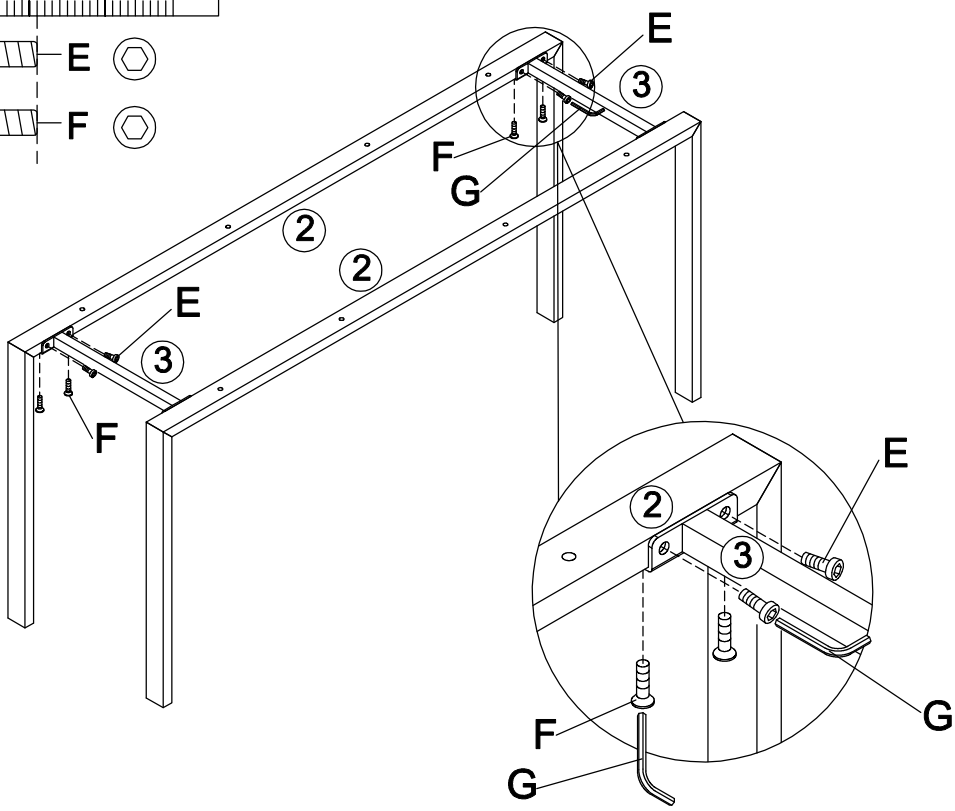

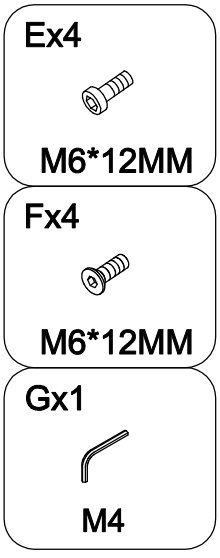

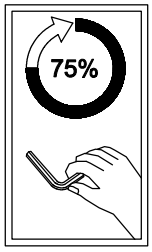

S.Essentials Console 2 Drawer
23701861 / 23701885

Step 3

Note: Please fasten all screws.

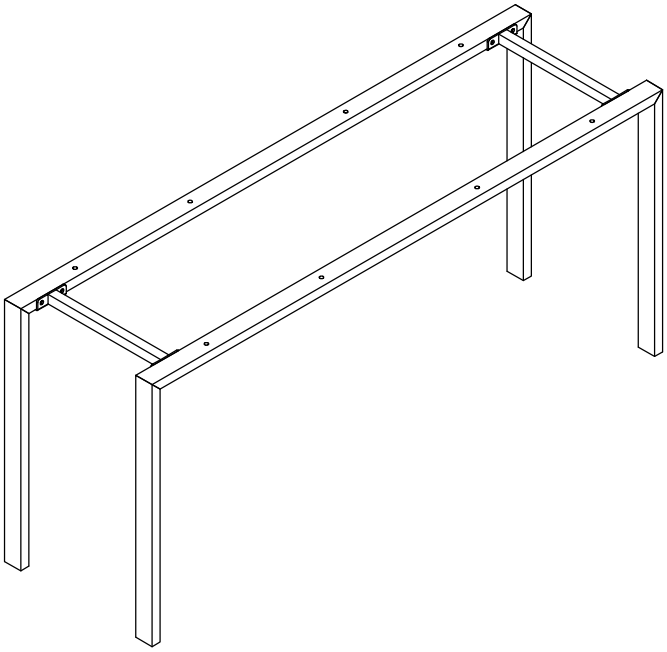

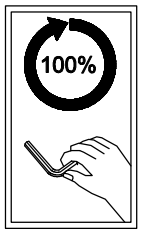

Step 4

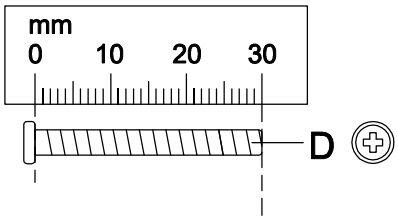

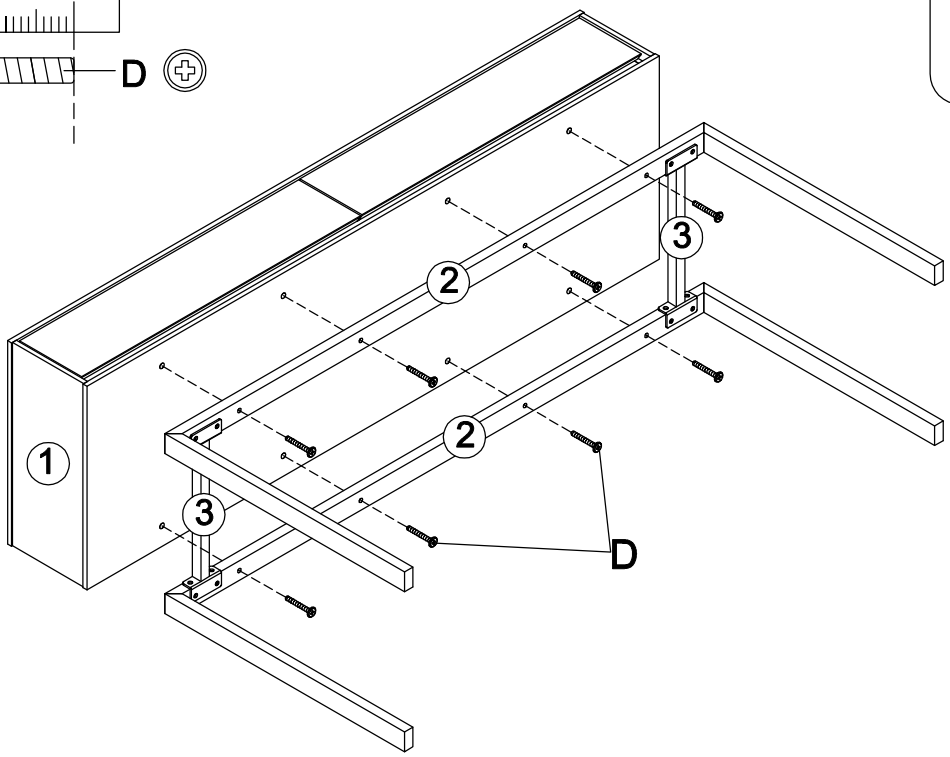

S.Essentials Console 2 Drawer
23701861 / 23701885

Step 5

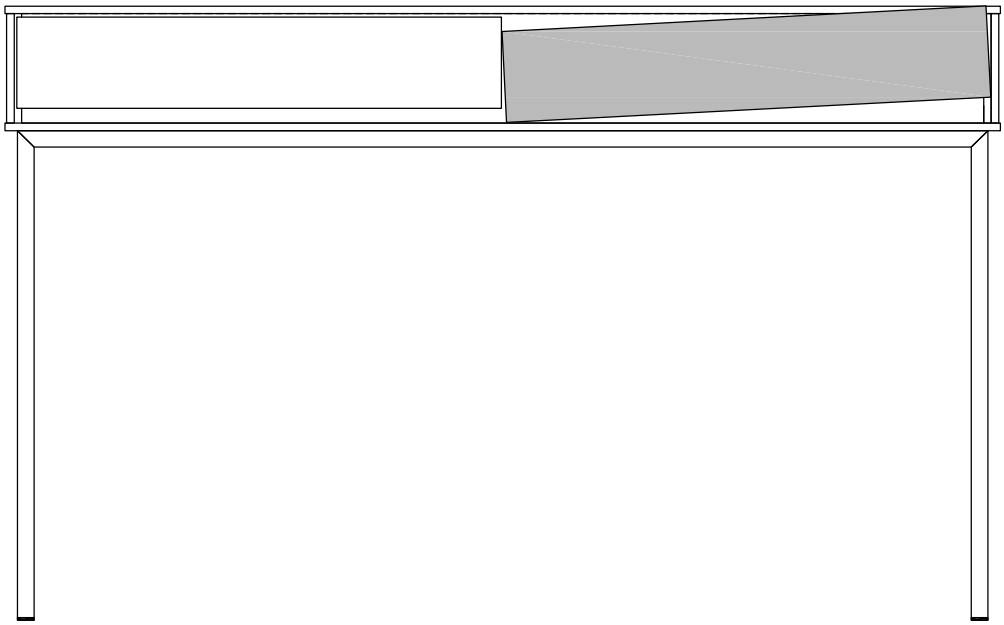

It is possible to adjust the drawers to make it well aligned and horizontal.

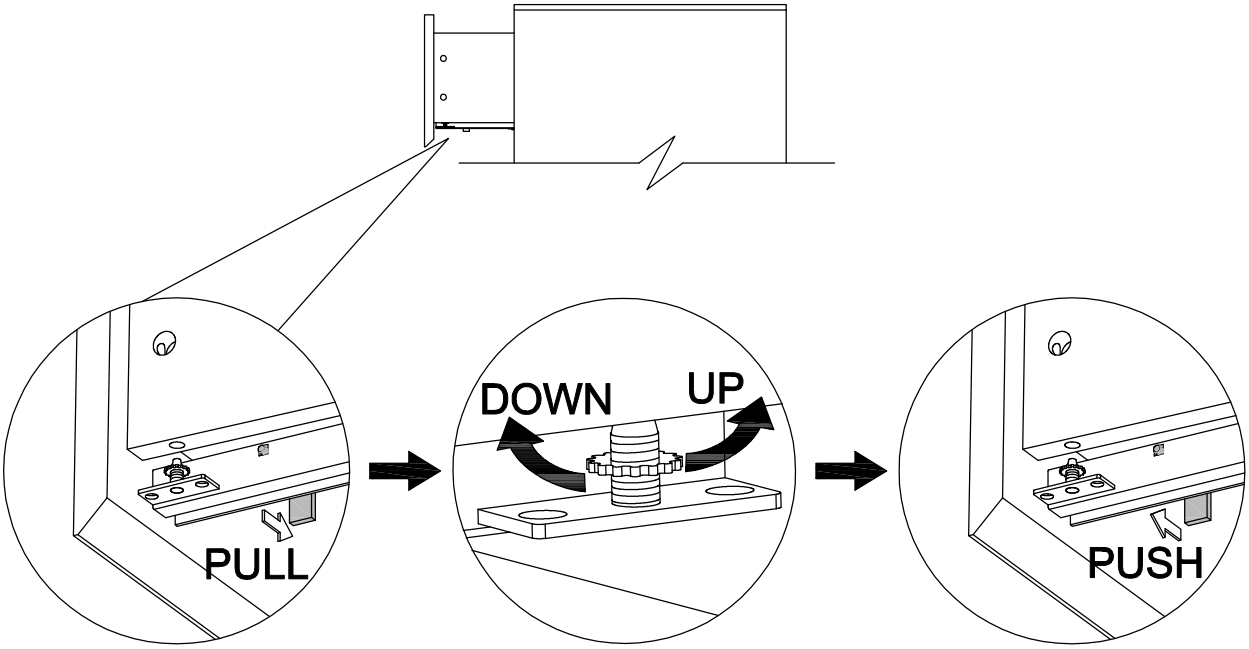

S.Essentials Console 2 Drawer
23701861 / 23701885

Step 6

WARNING
THIS ITEM NEEDS TO BE FIXED TO A WALL
Please read these assembly instructions carefully as failure to adhere and non use of strap or brackets cause the product to move and possibly lead to damage and/or injury if improperly fitted. If in doubt consult a qualified technician.

1. Place the unit into required position.
2. Ensure unit is level before securing to the wall.
3. Attach a bracket (C) to the unit back frame of the top with the short screws (B) provided.
4. Attach a bracket (C) to the wallboard with the long screws (not provided).
5. Move the unit into it's final position.Thread a strap (A) throught the bracket (C) as show in the below illustration,tighten strap (A) until snug. Do not over tighten.
6. Repeat the step 3 & 4 & 5 for the second strap/brackets fixing.
7. Make sure the bracket (C) is firmly attached to wallboard and unit and the strap (A) is snug.
8. Please note that the wall fixings such as wall plugs are not supplied - please secure the unit to the wall using the appropriate fixings for your wall type. These will be readily available from your DIY/Home improvement store.

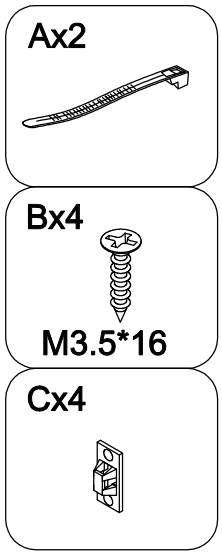

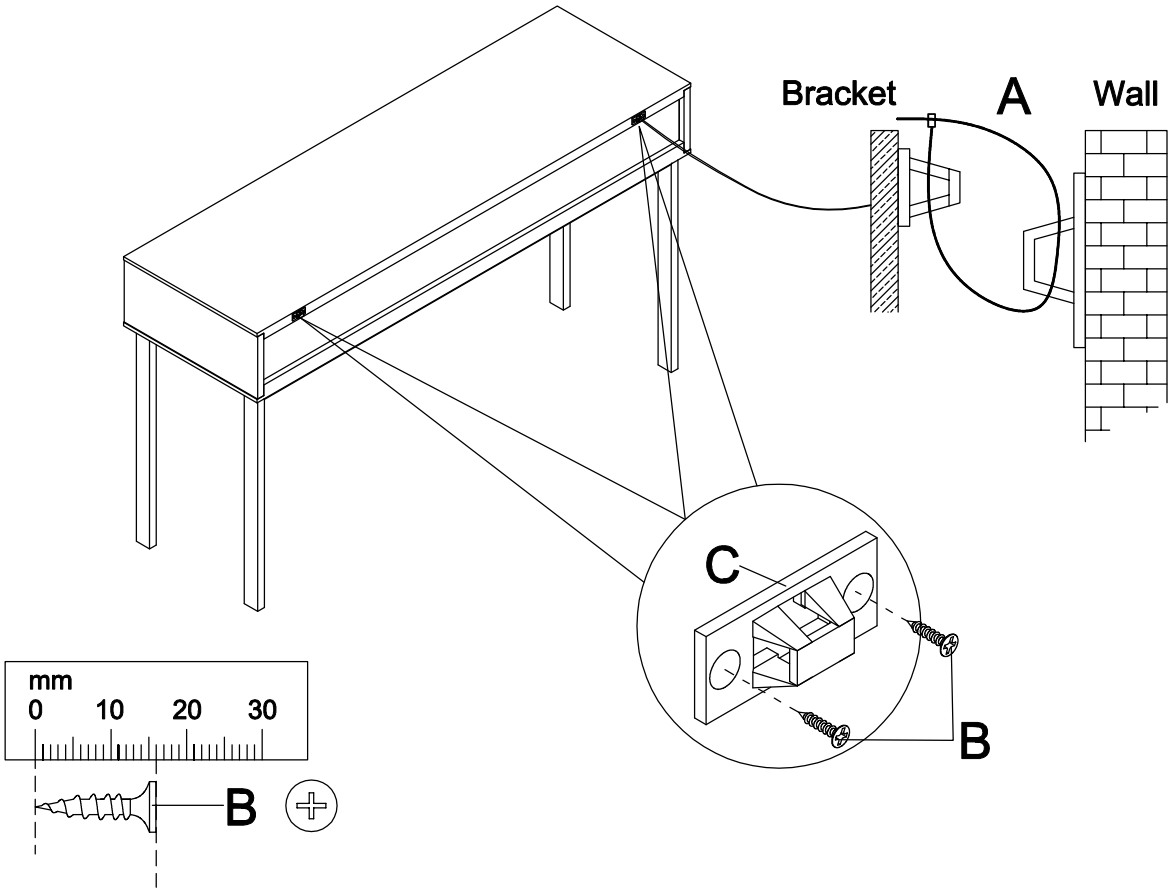

S.Essentials Console 2 Drawer
23701861 / 23701885

Finish

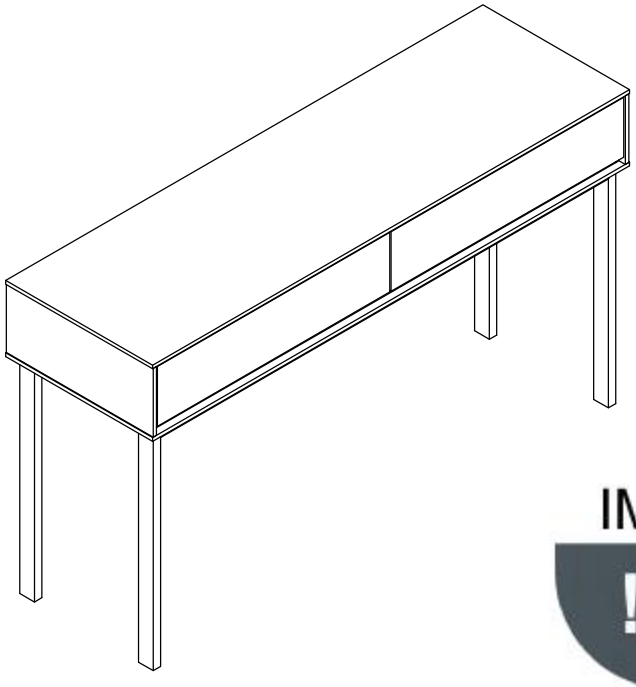

IMPORTANT!

Once completed, ensure that all screws are firmly tightened. This is very important for the safety of your product.

FINAL Step: Attach anti tilt strap or bracket to wall

WARNING:

To prevent your furniture from tilting forward and possibly causing property damage or personal injury it is recommended that you **Securely attach the anti-tilt straps or brackets provided to your wall using appropriate fixings**

IMPORTANT:

- **DO NOT** place toys or other child appealing items on top of this furniture
- **AVOID** fully opening all drawers at the same time
- **DO NOT ALLOW** Small children to climb onto Drawers, shelves or to swing from open doors

CAUTION:

For your safety when attaching the anti-tilt fixings;

- Check for any electrical wires or plumbing inside the wall before drilling any holes (if you are unsure please seek professional advice from a qualified tradesman)
- Walls are constructed from different materials eg; Masonry (solid brick) or plaster board lined cavity walls (hollow).

It is important that you use the appropriate wall fixings for your wall type.
(Your local hardware store will have the necessary drills and fixings and can offer advice if needed)