# VERO SIDE TABLE

# 23741171

Thank you for purchasing the Vero side table. Before you begin to assemble your new piece of furniture, please check to ensure that all hardware and parts have been supplied. This page lists all contents included in the carton(s).

Follow instructions closely as deviation from them may present a possible safety risk and may void your warranty.

It is recommended that assembly is done on a soft surface such as carpet to avoid any damage.

If you experience any problems with your new purchase, please phone Freedom Customer Service (FCS) on 1300 135 588 (Australia) or 0800 469 327 (New Zealand).

Care Infomation:

Dust weekly using a soft, clean cloth. Do not use harsh abrasives, chemicals or polishes containing silicone.
Avoid direct sunlight

Hardware (Supplied)

M6x35

A x 4

M6x40

B x 2

M6

C x 6

M6

D x 2

Tool Required (Not supplied)

Parts

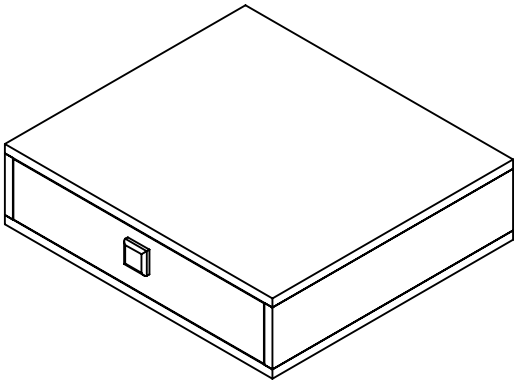

1 x 1

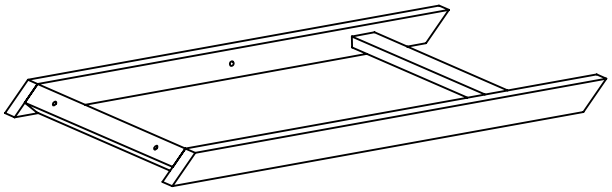

2 x 1

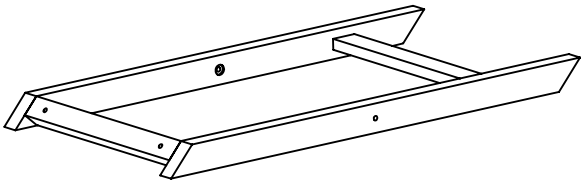

3 x 1

# VERO SIDE TABLE

## 23741171

Step 1

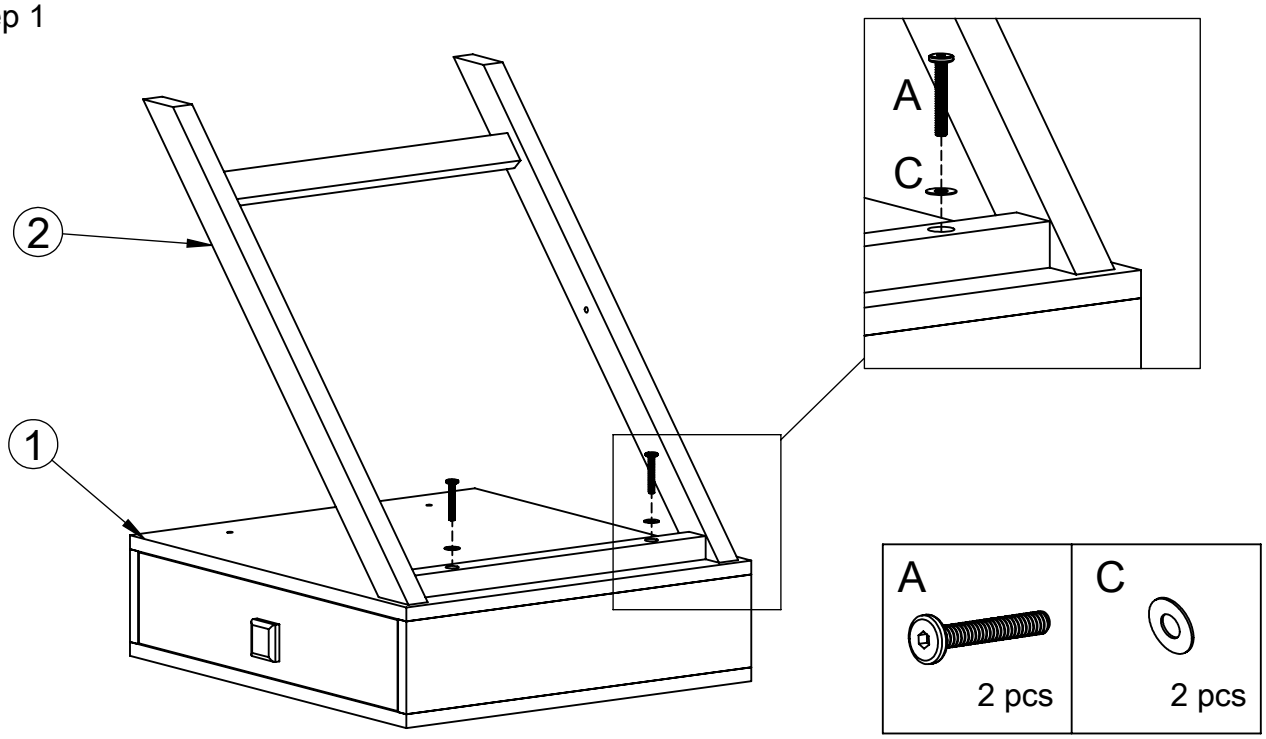


Step 2

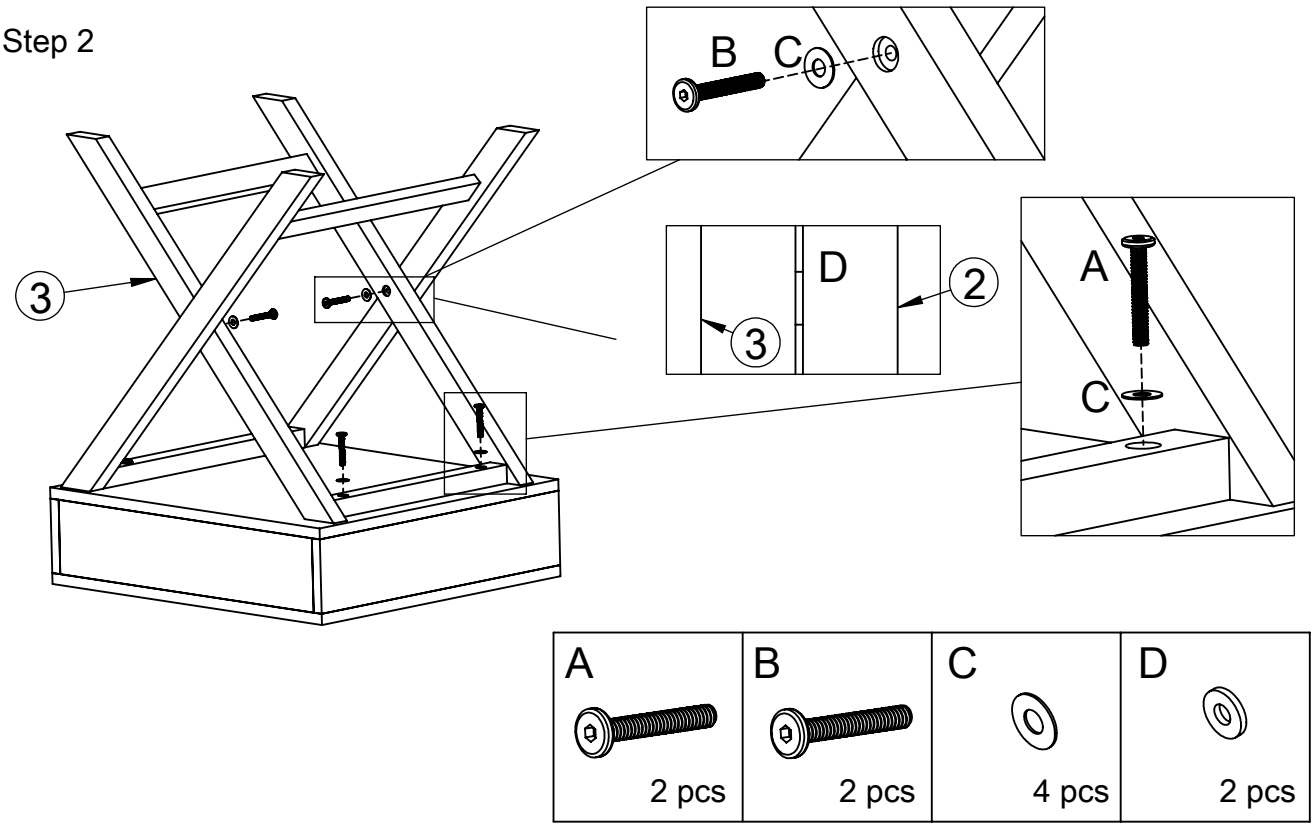

# VERO SIDE TABLE

# 23741171

Step 3

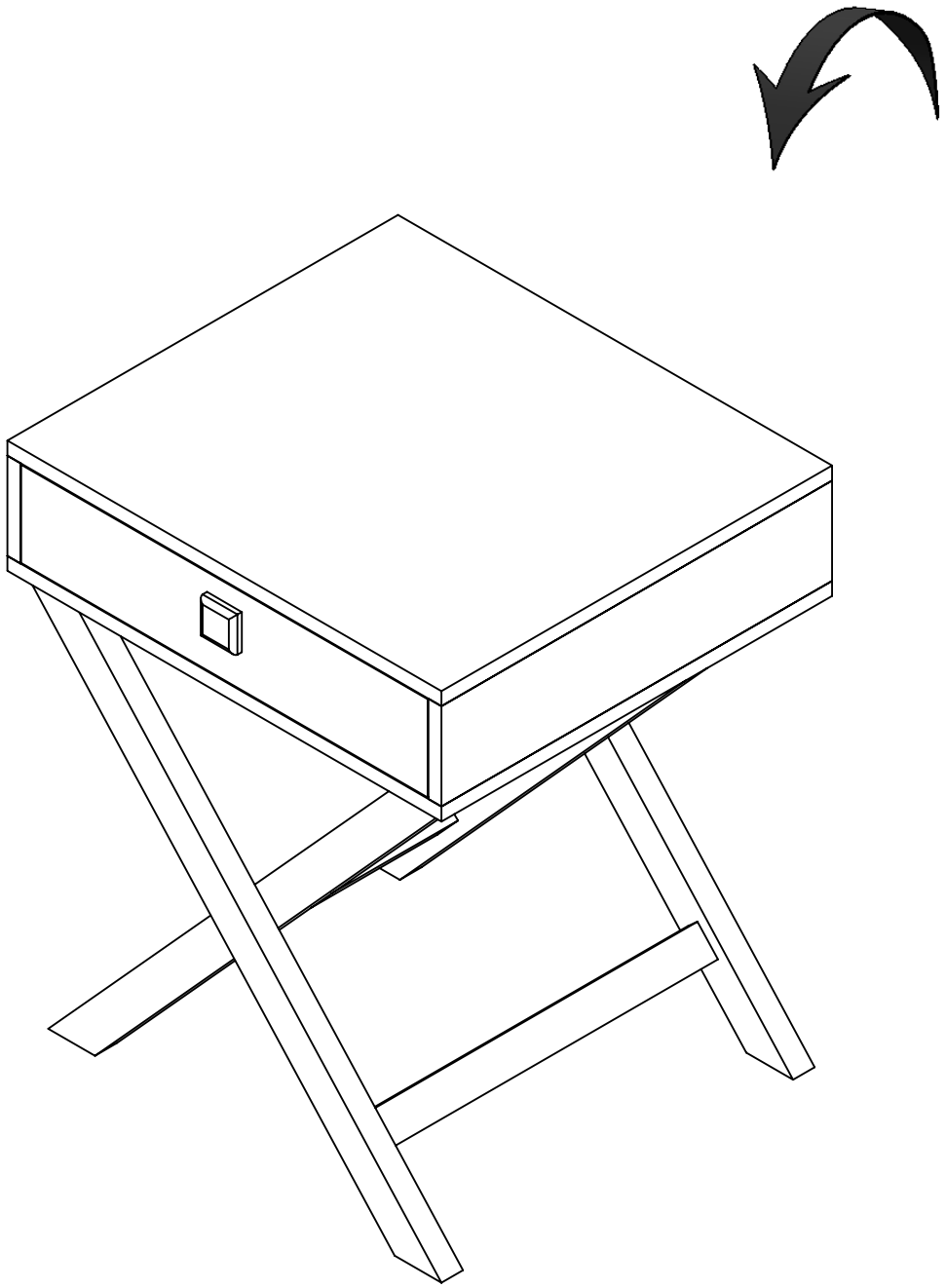

# VERO SIDE TABLE

# 23741171

Step 4

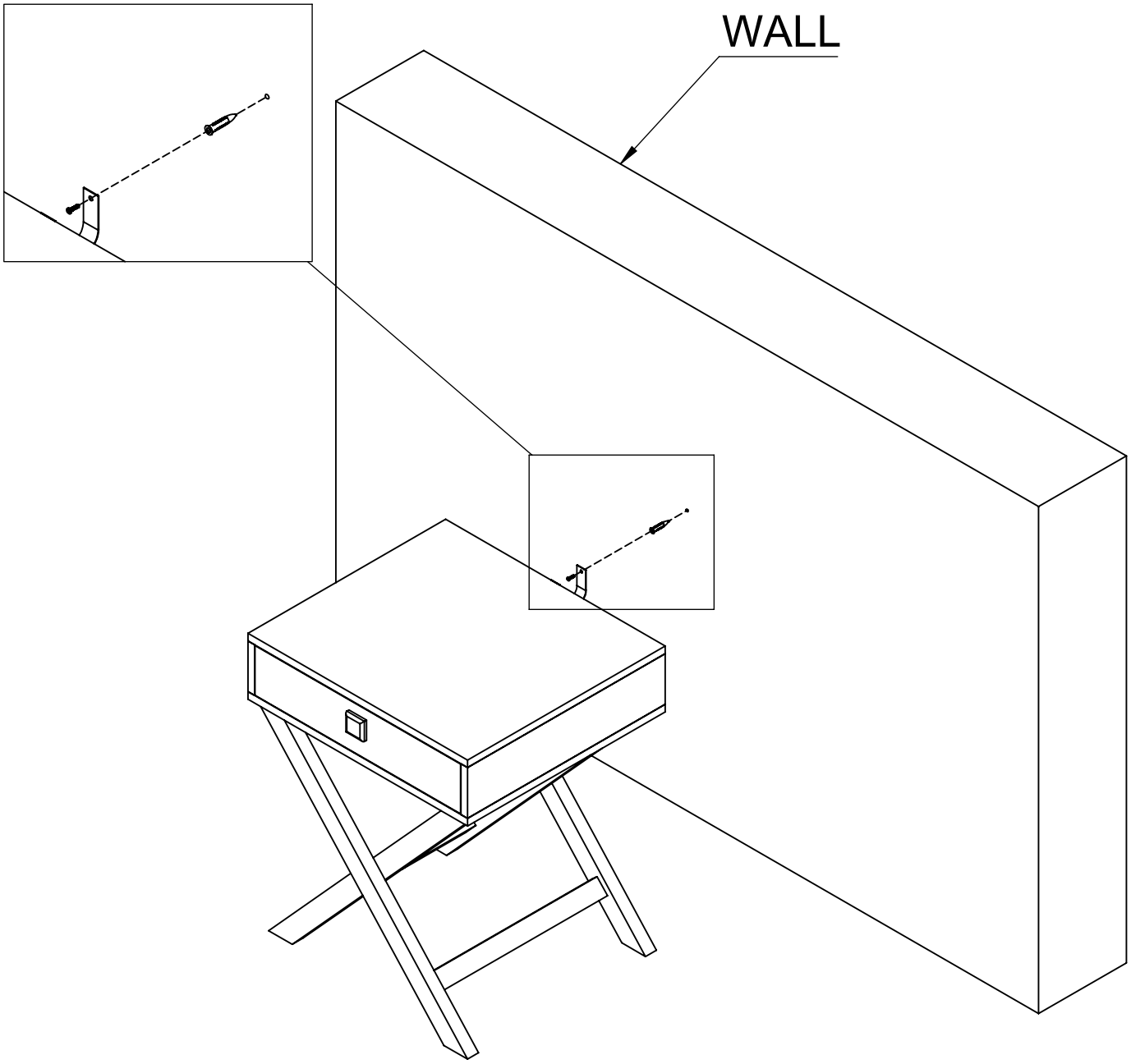

FINAL Step: Attach anti tilt strap or bracket to wall

WARNING:

To prevent your furniture from tilt forward and possibly causing property damage or personal injury it is recommmended that you Securely attach the anti-tilt traps or brackets provided to your wall using appropriate fixing.

IMPORTANT:

· DO NOT place toys or other child appealing items on top of this furniture

· AVOID fully opening all drawers at the same time

· DO NOT ALLOW Small children to climb onto Drawers, shelves or to swing from open doors.

CAUTION:

For your safety when attaching the anti-tilt fixings;

· Check for any electrical wires or plumbing inside the wall before drilling any holes ( if you are ensure please seek professional advice from qualified tradesman.)

· Wall are constructed from different marterials eg: Masonry ( solid brick) or plaster board lined cavity walls ( hollow).

It is important that you use the appropriate wall fixing for your wall type.

( Your local hardware will have the necessary drills and fixings and can offer advice if needed.)