# Maddox MKII / MKIII 2.5S Mod + Flip Chaise
# 24142311 / 24204880 / 24228206

Thank you for purchasing the Maddox MKII / MKIII Flip Chaise. Before you begin to assemble your new piece of furniture, please check to ensure that all hardware and parts have been supplied. This page lists all contents included in the carton(s).

Follow instructions closely as deviation from them may present a possible safety risk and may void your warranty.

It is recommended that assmebly is done on a soft surface such as carpet to avoid any damage. If you experience any problems with your new purchase, please phone Freedom Customer Service (FCS on 1300 135 588 (Australia) or 0800 469 327 (New Zealand).

## Care Information

Periodically check and re-tighten any fasteners. Avoid direct sunlight. Treat spills and stains as soon as they occur. Gently scrape any soil or mop any liquid from the surface of the fabric, apply proprietary cleaning agents stictly according to instuctions to remove the residue of the spill. Do not saturate the fabric or interior with water or other cleaning liquids. May be spot cleaned with dry cleaning solvent. Piling can occur occasionally as a result of normal daily weat and should not be consideed as a fault. Fibre pills can be removed by a battery operated pilling tool available from most haberdashery stores.

## Parts

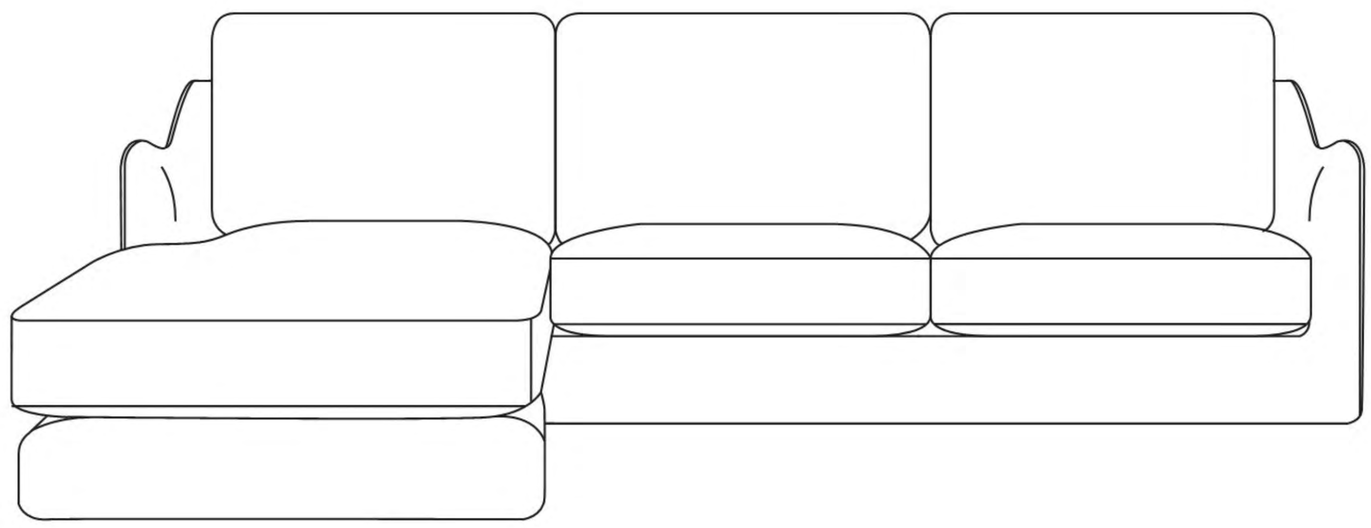

Part A x 1

Two people required to orientate sofa.

## Hardware List

Part B x 8
Leg

Part C x 8
Screw

Part D x 8
Washer

Part E x 2
Allen Key

Part F x 1
Middle Leg

# Maddox MKII / MKIII 2.5S Mod + Flip Chaise
# 24142311 / 24204880 / 24228206

Step 1.

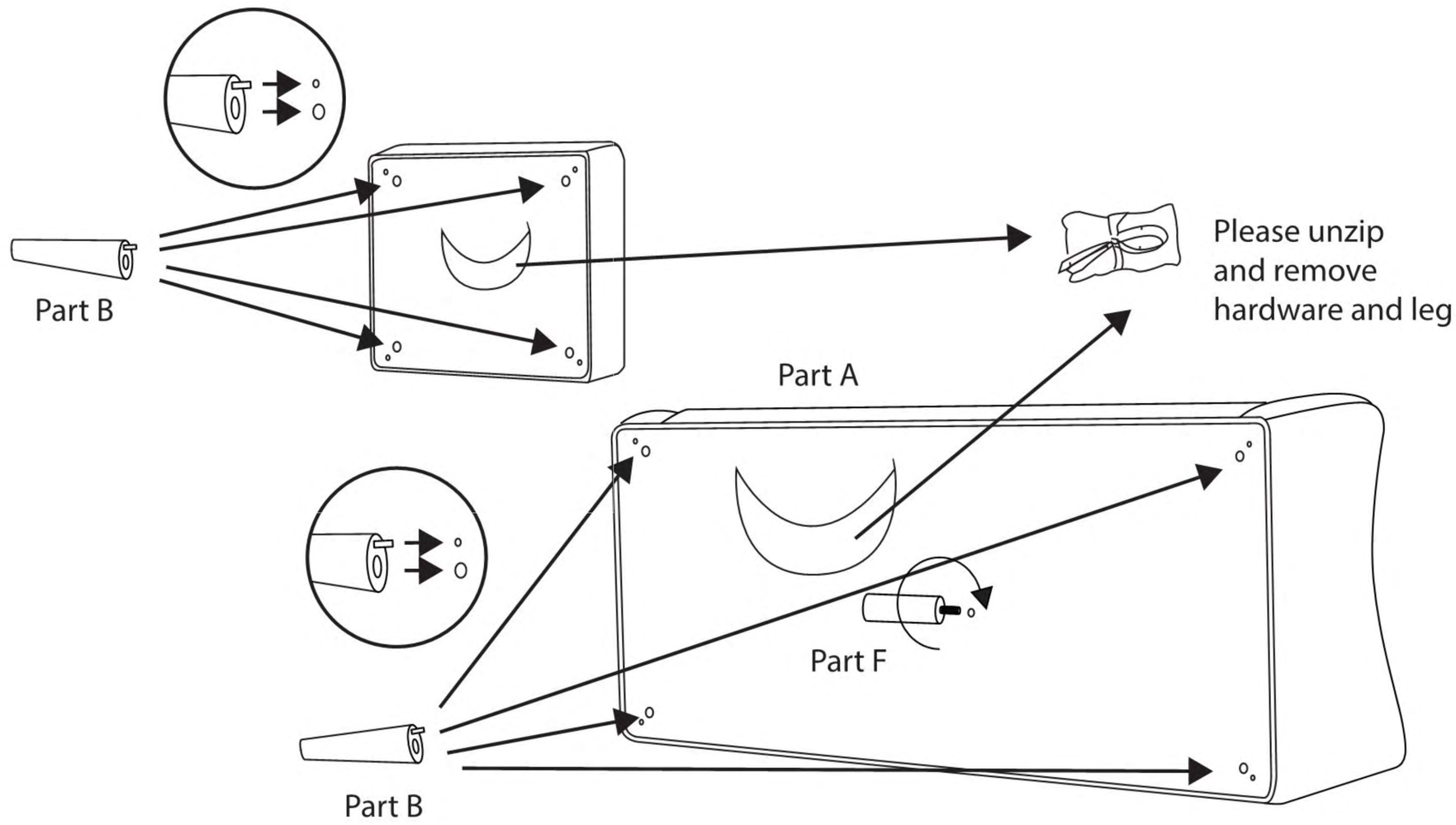


Step 2.

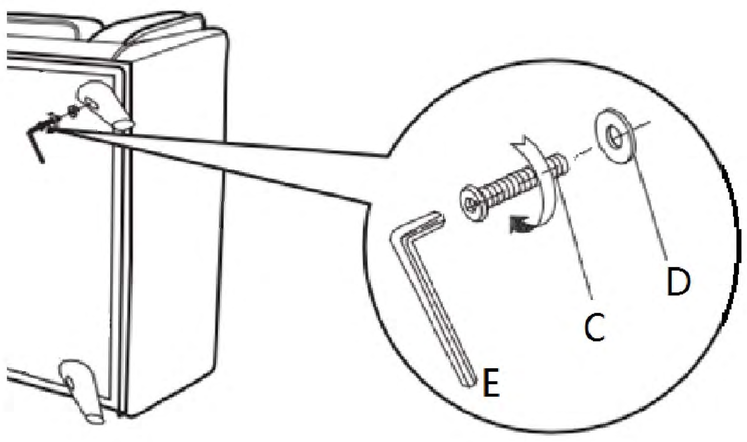

# Maddox MKII / MKIII 2.5S Mod + Flip Chaise
# 24142311 / 24204880 / 24228206

Step 3.

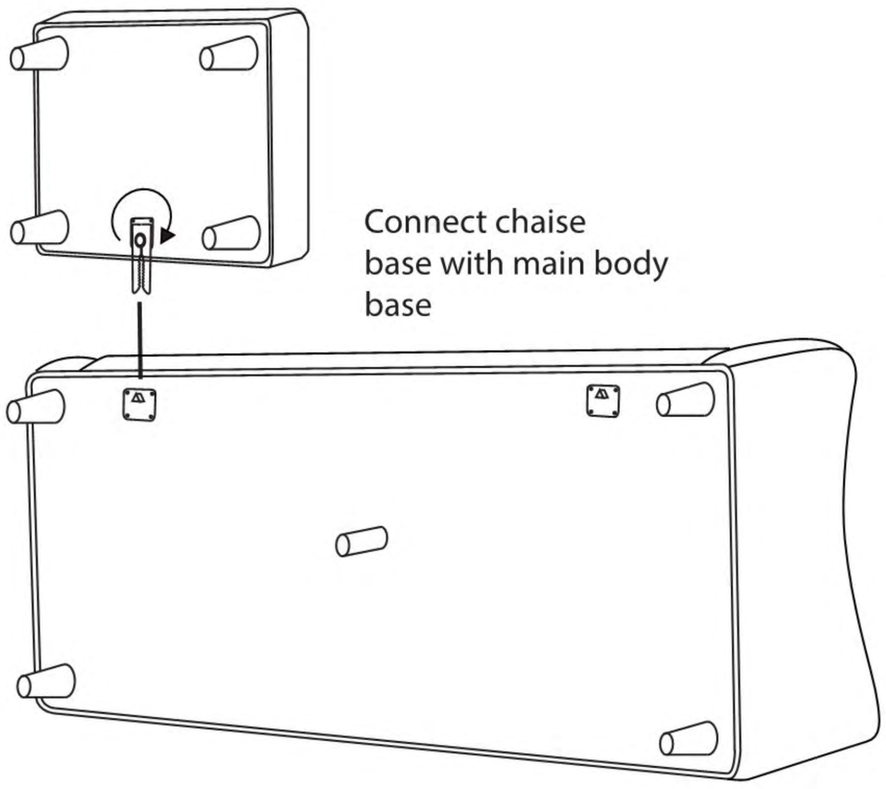


OR

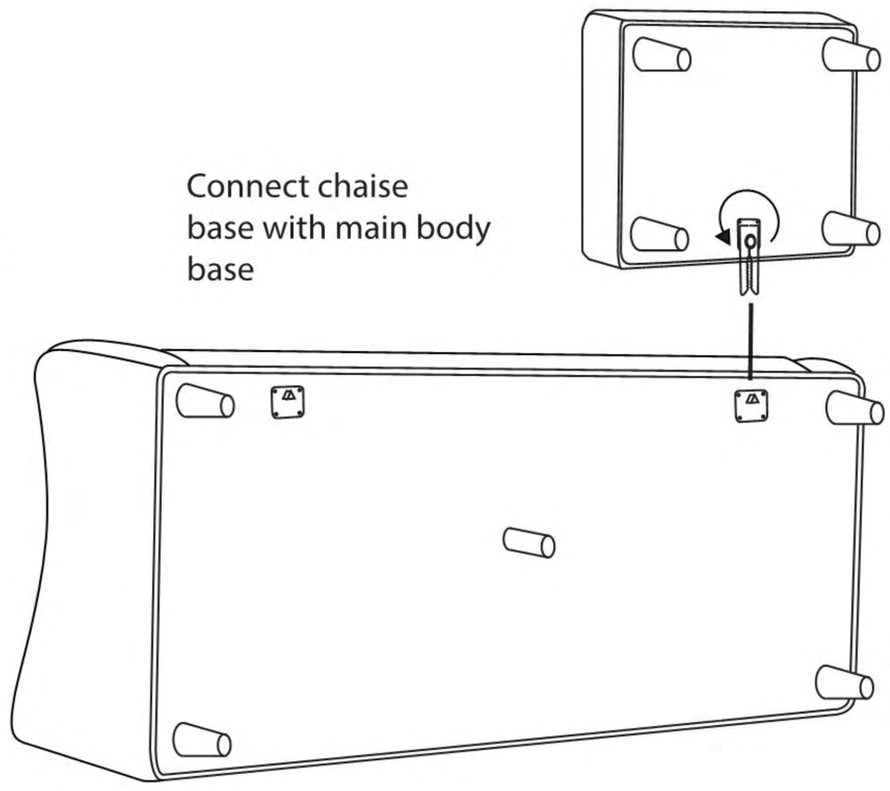


Finished.

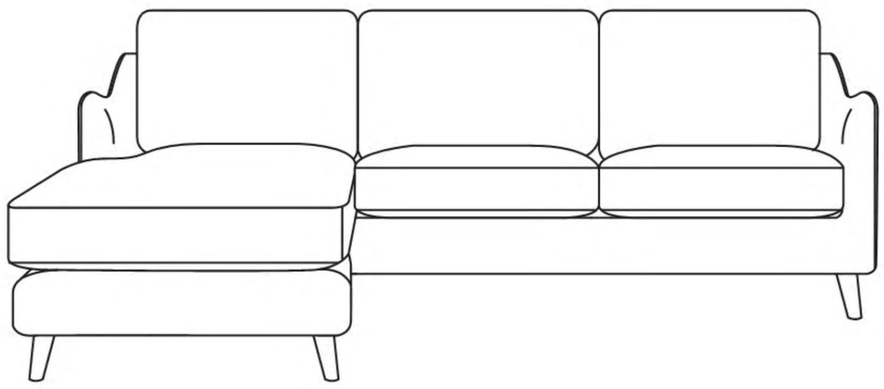
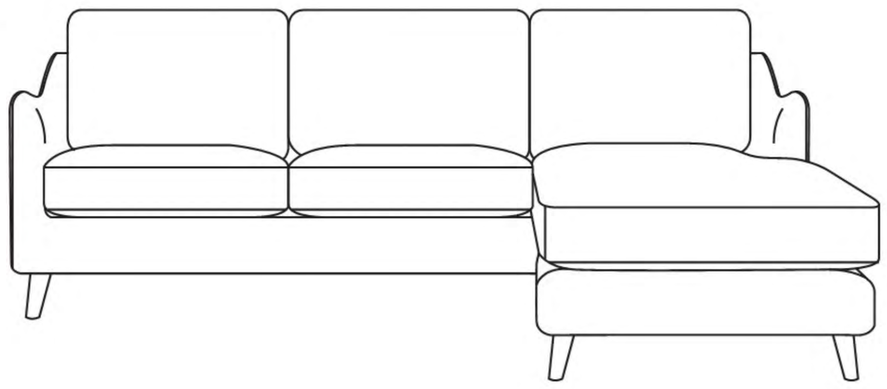
OR